344606-310	344606-309	344606-308	344606-307	344606-306	344606-305	344606-304	344606-303	344606-210	344606-209	344606-208	344606-207	344606-206	344606-205	344606-204	344606-203	344606-110	344606-109	344606-108	344606-107	344606-106	344606-105	344606-104	344606-103	344606-102				
114.248	103.404	92.217	81.030	70.186	59.00	47.812	36.968	114.248	103.404	92.217	81.030	70.186	59.00	47.812	36.968	114.248	103.404	92.217	81.030	70.186	59.00	47.812	36.968	25.781	DIM.'A'			
QTY.	QTY.	QTY.	QTY.	QTY.	QTY.	QTY.	QTY.	QTY.	QTY.	QTY.	QTY.	QTY.	QTY.	QTY.	QTY.	QTY.	QTY.	QTY.	QTY.	QTY.	QTY.	QTY.	QTY.	QTY.	ITEM	TRION PART NO.	DESCRIPTION	REMARKS
6	–	3	6	–	3	6	–	4	–	2	4	–	2	4	–	2	–	1	2	–	1	2	–	1	1	322031-006	METAL MESH FILTER	2'
6	9	6	3	6	3	–	3	4	6	4	2	4	2	–	2	2	3	2	1	2	1	–	1	–	2	322031-007	METAL MESH FILTER	3'
12	9	9	9	6	6	6	3	8	6	6	6	4	4	4	2	4	3	3	3	2	2	2	1	1	3	223522-001	FILTER CLIP	
3	3	3	3	3	3	3	3	2	2	2	2	2	2	2	2	1	1	1	1	1	1	1	1	1	4	344611-001	FILTER PULL	

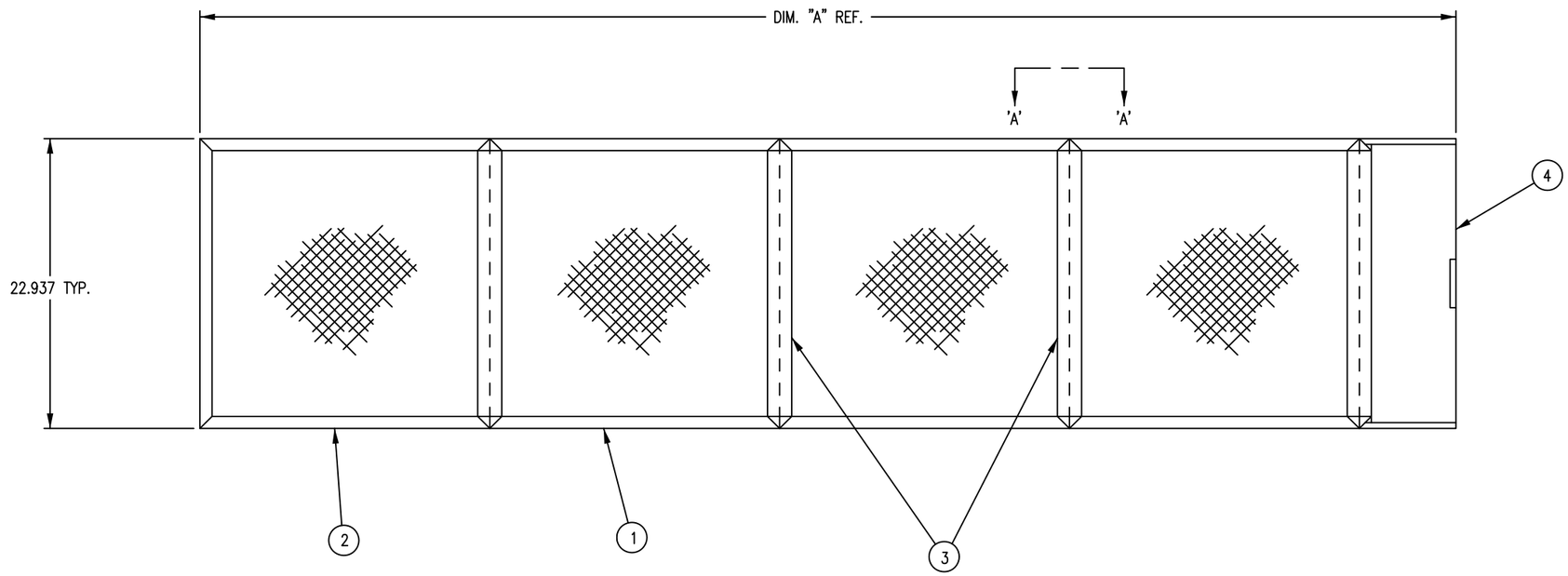

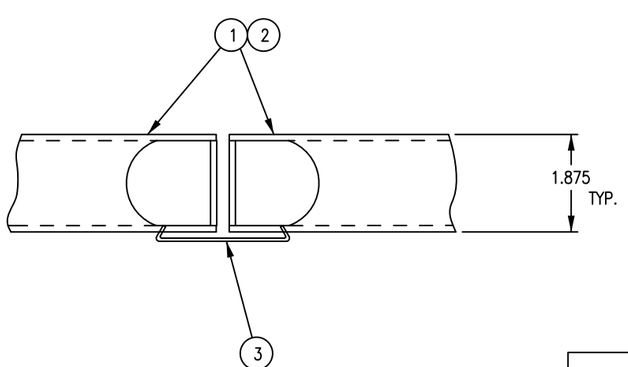

SECTION 'A'–'A'

SCALE: 1/2"=1"

NOTES:

1.) FILTER ASSEMBLY SHOWN IS TYPICAL OF ASSEMBLY P.N. 344606–110
2.) REFER TO UNIT ASS'Y., P/N 444604, SHT 2/4 FOR LOCATION OF PRE AND POST FILTERS.

REVISIONS

CO–9198–18

		UNLESS OTHERWISE SPECIFIED USE				TITLE		REV
	MODEL 72	SCALE NTS	2 DEC. PLACE ± .03	3 DEC. PLACE ±.015	ANGLES ± 1/2	FILTER ASSEMBLY – 2" NOMINAL		—
NEXT ASSY	USED ON	DR. WJC	CHKD. DBP	APP. DBP		TRION, INC. SANFORD, NORTH CAROLINA 27330	DWG 344606	SHT 1/1
APPLICATION		DATE 4–23–92	DATE 10–28–92	DATE 10–28–92			THIS DRAWING PROPERTY OF TRION, INC.	